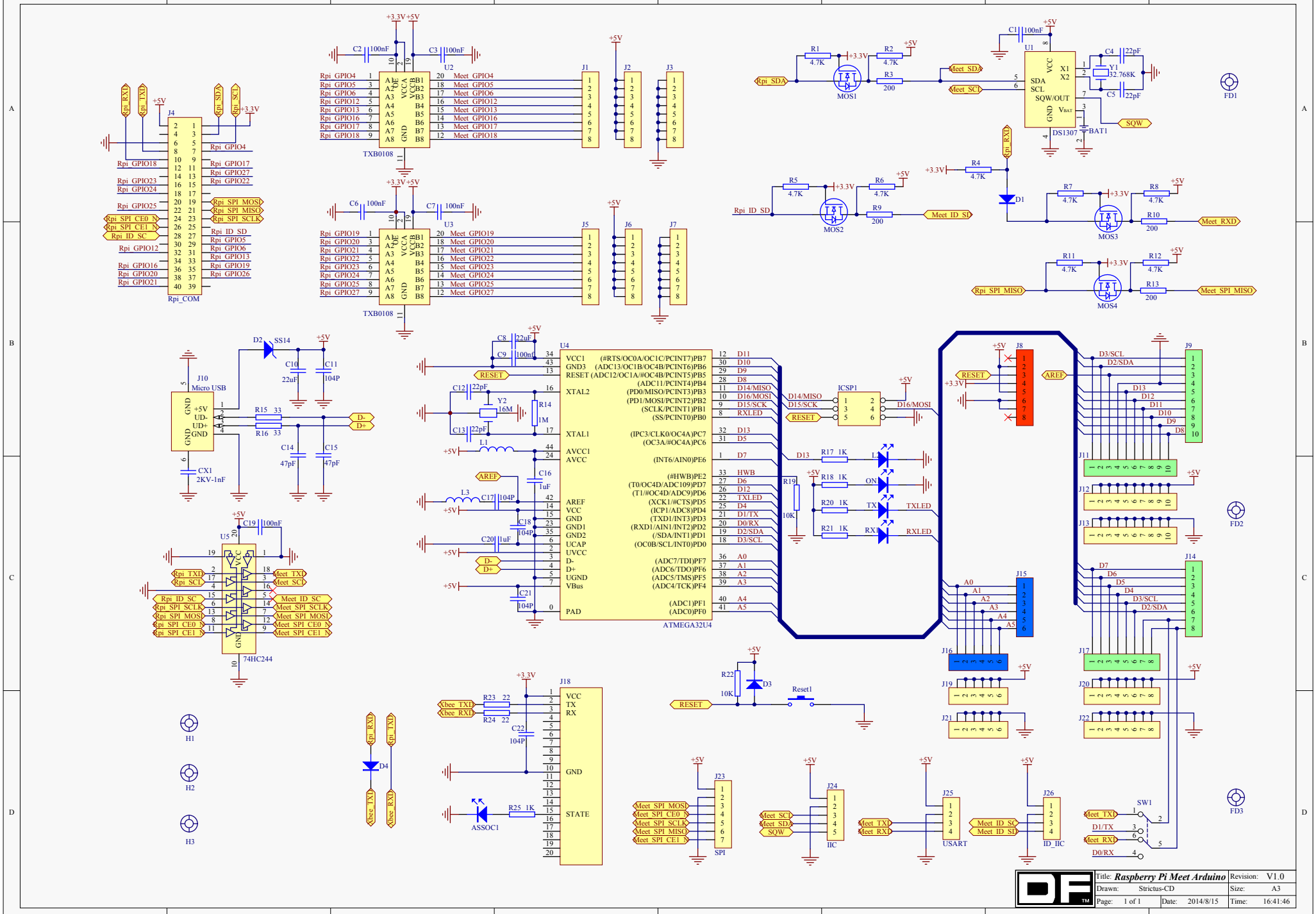
Rpi_COM
TXB0108
U2
U3
J1
J2
J3
J5
J6
J7
MOS1
MOS2
MOS3
MOS4
U1
DS1307
BAT1
Y1
32.768K
FD1
FD2
FD3
J10
Micro USB
D2
SS14
CX1
2KV-1nF
U5
74HC244
U4
ATMEGA32U4
ICSP1
J8
J9
J11
J12
J13
J14
J15
J16
J17
J18
J19
J20
J21
J22
J23
SPI
J24
IIC
J25
USART
J26
ID_IIC
SW1
Reset1
ASSOC1
H1
H2
H3
D4
Title: Raspberry Pi Meet Arduino
Revision: V1.0
Drawn: Strictus-CD
Size: A3
Page: 1 of 1
Date: 2014/8/15
Time: 16:41:46