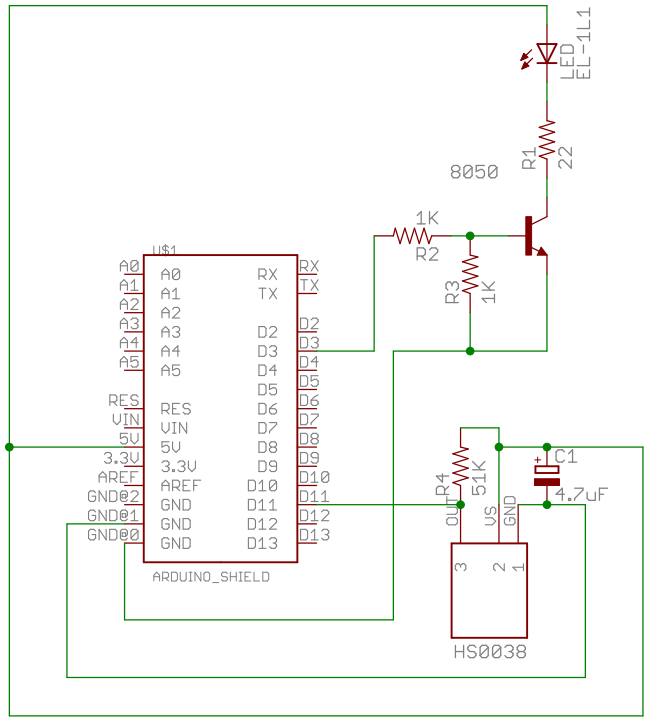

TITLE: arduino_IR

Document Number:

REV:

Date: 9/28/2010 12:14:40 AM

Sheet: 1/1